| ITEM | MODIFICATION | DATE | DRAW | APPROVE |
|---|---|---|---|---|
| A0 | 新版发行 | 2020-11-01 | 望 盛 | 袁俊林 |
| | | | | |
| | | | | |

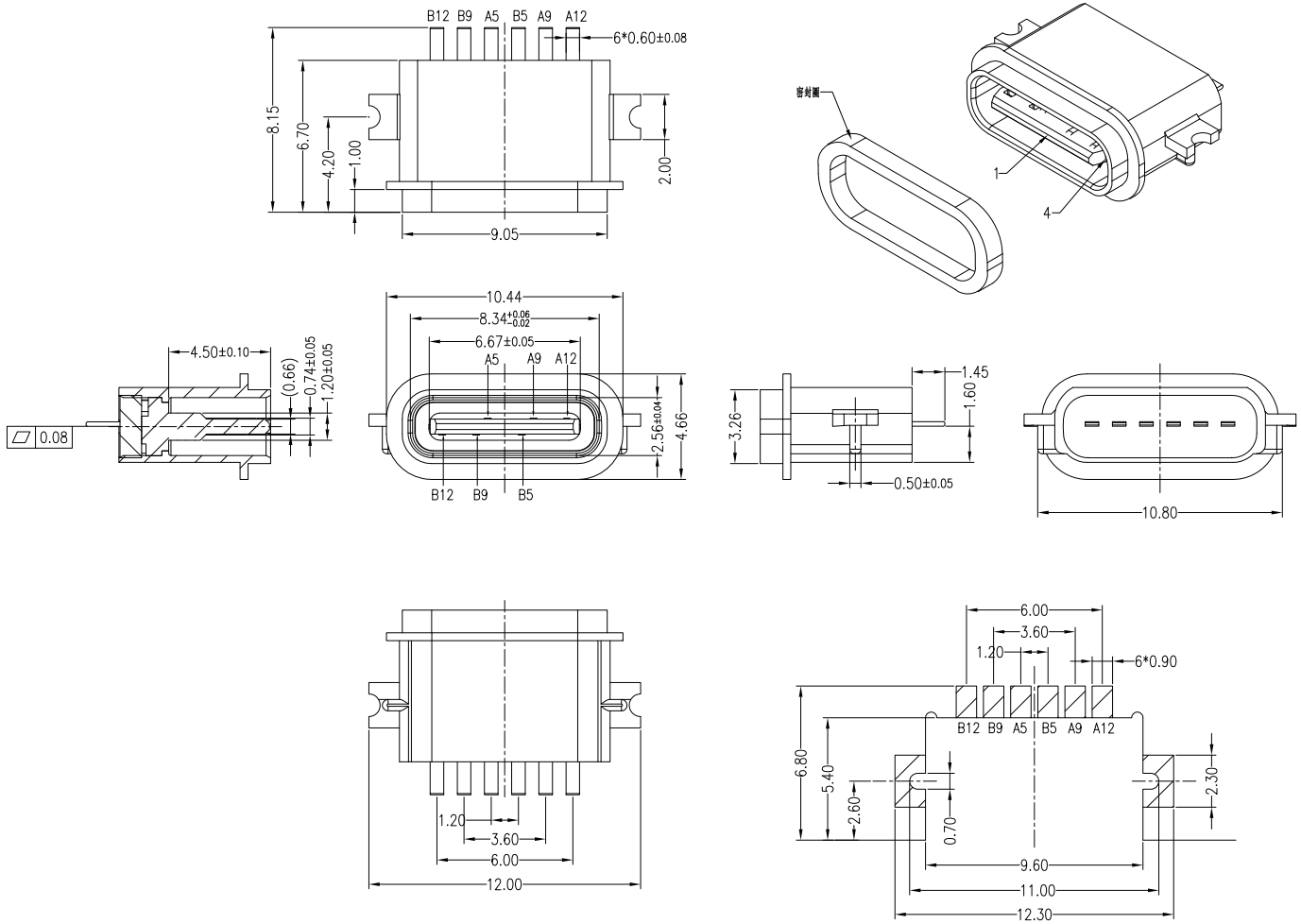


Note:
1.Material:
1.1 Housing:High temperature thermoplastic UL94V-0
1.2 Contact:Copper Alloy
1.3 Shell: Zinc Alloy.
1.4 Middle plate: SUS
2.ELECTRICAL:
2-1:CURUENT RATAING:
VBUS AND GND CONTACTS RATED AT 3A Max
VBUS AND GND CONTACTS RATED AT 0.5A Min
0.9Amps Max.for all other contact.
PARALLELED FOR A TOTAL OF 5A;
2-2:INITIAL CONTACT RESISTANCE:40 MEGOHMS
2-3:DIEELECTRIC WITHSTANDING VOLTAGE:100V AC MIN;
3:MECHANICAL CHARACTERISTICS:
3-1:MATING FORCE:5~20N
3-2:UNMATING FORCE:8~20N(INITIAL),
6~20N(AFTER 10000 CYCLES)
3-3:FREQUENCE: 200±50 CYCLES/HOUR,10000 CYCLES
3-4:OPERATING TEMPERATURE;-40°~80°.
4:WATERPROOF: IP-X7.
CX010

PCB LAYOUT 图仅供参考

TABLE:

| PRODUCT NO. | ITEM | PART NAME | Q'TY | Material |
|---|---|---|---|---|
| BNF01S2210R-W | 1 | SHELL | 1 | Zinc Alloy Ni 80u" |
| | 2 | CONTACT | 6 | C5191 接触区半金雾锡3U" |
| | 3 | HOUSING | 1 | LCP Black |
| | 4 | RING | 1 | Silica Gel RED |
| | | | | |

TABLE B

| PIN | SIGNAL NAME | PIN | SIGNAL NAME |
|---|---|---|---|
| A5 | CC1 | B12 | GND |
| A9 | VBUS | B9 | VBUS |
| A12 | GND | B5 | CC2 |

TOLERANCE UNLESS OTHERWISE SPECIFIED
.X±0.3
.XX±0.2
.XXX±0.1

PROJ.

DIMENSION STYLE MM ONLY

DESIGN UNITY METRIC

SCALE 1:1

CXUN® 东莞市超讯电子有限公司
transcend communication

| | | | |
|---|---|---|---|
| DRAWN BY 望 盛 | DATE 2020-11-01 | TITLE TYPE C 6PIN 沉板1.6防水有钢片 | |
| CHECKED BY 望 盛 | DATE 2020-11-01 | PART NO. BNF01S2210R-W | SHEET NO. 1 OF 1 |
| APPROVED BY 袁俊林 | DATE 2020-11-01 | MOLD NO. DWG-USB CF-071 | C REV. A0 |